CMOS CAMERA MODULES

your BEST camera module partner

KLT-D3MA-IMX258 V2.0

SONY IMX258 MIPI Interfaz Enfoque automático 13MP Módulo de cámara

Módulo de cámara No.	**KLT-D3MA-IMX258 V2.0**
Sensor de imagen	IMX258
EFL	3.85 mm
F.NO	2.2
Pixel	4224 x 3136
Ángulo de visión	74.4°
Tipo de lente	1/3.06 pulgada
Dimensiones de la lente	8.50 x 8.50 x 5.37 mm
Tamaño del módulo	20.85 x 8.50 mm
Tipo de módulo	Enfoque automático
Interfaz	MIPI
Modelo de lente IMT	IMT-1A65M004-N

N. ° de pieza del conector de acoplamiento. BBR43-30KB533

Conector de acoplamiento en la placa principal. Se vende por separado.

www.KaiLapTech.com sales@KaiLapTech.com Tel: (852) 6908 1256 Fax: (852) 3017 6778

All rights reserved @ Kai Lap Technologies Group Ltd. Specifications subject to change without notice.

SONY

[Product Brief]

Ver.1.0

IMX258

Diagonal 5.867 mm (Type 1/3.06) 13Mega-Pixel CMOS Image Sensor with Square Pixel for Color Cameras

Description

IMX258 is a diagonal 5.867mm (Type 1/3.06) 13 Mega-pixel CMOS active pixel type stacked image sensor with a square pixel array. It adopts Exmor RS™ technology to achieve high speed image capturing by column parallel A/D converter circuits and high sensitivity and low noise image (comparing with conventional CMOS image sensor) through the backside illuminated imaging pixel structure. R, G, and B pigment primary color mosaic filter is employed. By introducing spatially multiplexed exposure technology, high dynamic range still pictures and movies are achievable. It
equips an electronic shutter with variable integration time. It operates with three power supply voltages: analog 2.7 V, digital 1.2 V and 1.8 V for input/output interface and achieves low power consumption.
In addition, this product is designed for use in cellular phone and tablet pc. When using this for another application, Sony does not guarantee the quality and reliability of product. Therefore, don't use this for applications other than cellular phone and tablet pc. Consult your Sony sales representative if you have any questions.

Functions and Features

- Back-illuminated and stacked CMOS image sensor Exmor RSTM
- Phase Detection pixel data output for Phase Detection Auto Focus
- High Dynamic Range (HDR) mode with raw data output.
- High signal to noise ratio (SNR).
- Full resolution @30fps (Normal / HDR). 4K2K @30fps (Normal / HDR) 1080p @60fps (Normal)
- Output video format of RAW10/8.
- Pixel binning readout and V sub-sampling function.
- Independent flipping and mirroring.
- CSI-2 serial data output (MIPI 2lane/4lane, Max. 1.3Gbps/lane, D-PHY spec. ver. 1.1 compliant)
- 2-wire serial communication.
- Two PLLs for independent clock generation for pixel control and data output interface.
- Dynamic Defect Pixel Correction.
- Fast mode transition. (on the fly)
- Dual sensor synchronization operation.
- 4K bit of OTP ROM for users.
- Built-in temperature sensor.

Camera Module Factory
www.KaiLapTech.com

Device Structure

- CMOS image sensor
- Image size : Diagonal 5.867 mm (Type 1/3.06)
- Total number of pixels : 4224 (H) × 3192 (V) approx. 13.48 M pixels
- Number of effective pixels : 4224 (H) × 3144 (V) approx. 13.28 M pixels
- Number of active pixels : 4208 (H) × 3120 (V) approx. 13.13 M pixels
- Chip size : 5.990 mm (H) × 3.908 mm (V)
- Unit cell size : 1.12 µm (H) × 1.12 µm (V)
- Substrate material : Silicon

System block diagram

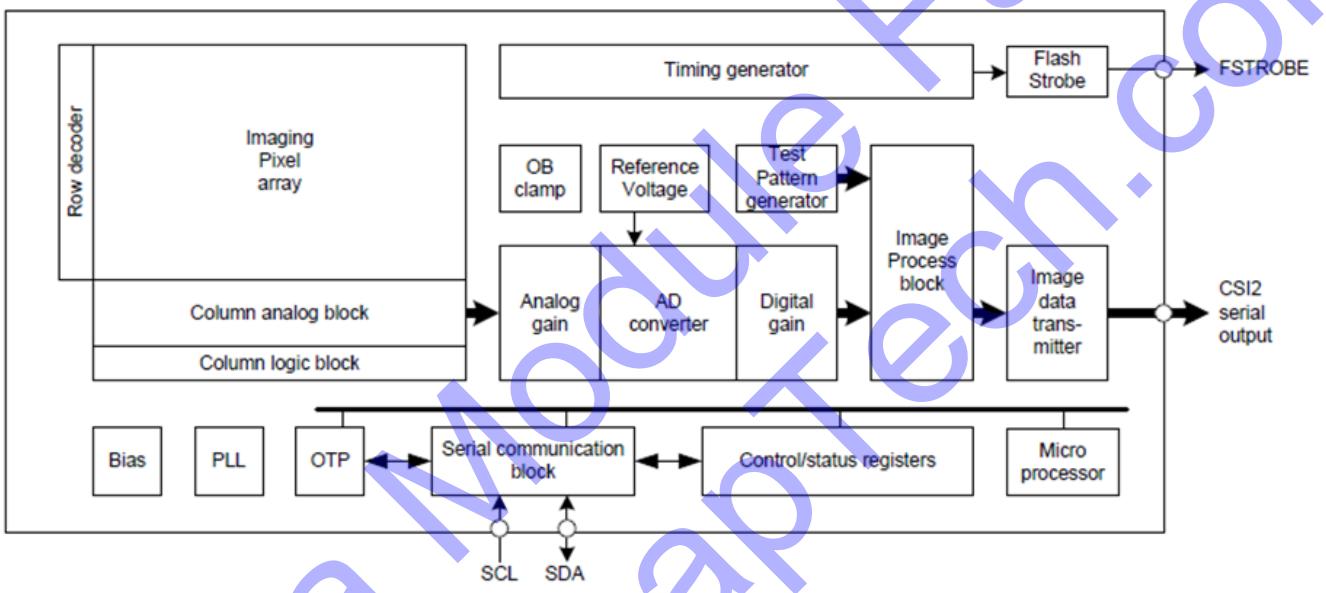

Exmor RS

* Exmor RS is a trademark of Sony Corporation. The Exmor RS is a Sony's CMOS image sensor with high-resolution, high-performance and compact size by replacing a supporting substrate in Exmor R™ which changed fundamental structure of Exmor™ pixel adopted column parallel A/D converter to back-illuminated type, with layered chips formed signal processing circuits.

Camera Module Factory
www.KaiLapTech.com